BEST
Journal of Applied Electrical & Science Technology – University of PGRI Adi Buana Surabaya
p-ISSN 2715-2871
e-ISSN 2714-5247

Effectiveness of Wavelet and Fourier Transform Methods for Denoising ECG Apnea Signals

Rasyida Shabihah Zukro Aini
Departement of Electrical Engineering
PGRI Adi Buana Surabaya University
Surabaya, Indonesia
rasyida@unipasby.ac.id

Elsa Sari Hayunah Nurdiniyah
Departement of Electromedical Engineering
PKU Muhammadiyah Institute of Science Technology
Surakarta, Indonesia
Elsa.sari.hn@gmail.com

***Abstract*—An Electrocardiogram (ECG) signal results from recording the heart's electrical activity. Currently, diseases originating from heart abnormalities still dominate the world. Therefore, doctors need to find an ECG signal that is free from noise, this cleaning process is called denoising. The denoising methods commonly used are the wavelet transform method, and the Fourier transform method. Testing was conducted on ECG signal data with abnormalities in Apnea with RR intervals filled with noise, making the QRS complex difficult to identify. As a result, the Discrete Wavelet Transform (DWT) method produces the best form of reconstruction, resembling the initial ECG signal, while the Fast Fourier transform (FFT) method produces the best signal-to-noise ratio (SNR) for the denoising process. So, we get a superior FFT method in the ECG signal denoising process.**

Keywords—Apnea, Denoising, DWT, ECG, FFT, SNR

I. Introduction

Electrocardiogram (ECG) signals generally have different noises ranging from low to high frequency caused by power line interference, channel noise, baseline wander, electrode contact noise, and motion artifacts. These noise disturbances result in incorrect interpretation of signal information, so the denoising process can be the best choice. The signal denoising process is recovering basic signal information from a mixture of signal and noise [1][2].

Denoising methods commonly used in ECG signal processing [3] are filtration techniques, Discrete wavelet transform (DWT), Bionic Wavelet transform (BWT), Filtered residue (FR), and Empirical Mode Decomposition (EMD). The wavelet transform is the most commonly used method among the five methods. Meanwhile, the wavelet transform results are often compared with the results of the Fourier transform to provide a relationship in the time domain in the signal denoising process.

II. Methods

The denoising process proposed in this research consists of discrete wavelet transform (DWT) and fast Fourier transform (FFT). DWT has important aspects, namely frequency, and locality, while FFT only has frequency aspects.

A. ECG Signal

The electrocardiogram (ECG) signal comes from the Physionet database website [8]. This ECG signal has an apnea-type abnormality, which is recorded for 1 minute and has a sampling frequency of 100 Hz and a gain of 200 adu/mV. [4] Visual apnea abnormalities in the ECG signal are observed in the RR interval (the time interval from one R wave to the next R wave) as a variation in the duration of the heartbeat. This disorder can be expressed as bradycardia or tachycardia.

B. Discrete Wavelet Transform (DWT)

[5] In DWT, the signal is expressed as a linear combination of the sum of products of the wavelet coefficient and the mother wavelet. DWT carries out the signal decomposition process into approximation and detailed information. The DWT denoising process is shown in Figure 1, where the second block defines wavelet parameters divided into wavelet type, maximum level, and threshold for filtering. Meanwhile, the third block process, DWT, will provide approximation and detail coefficients output. Next, in the fourth block, namely inverse DWT, the DWT results are reconstructed into the time domain again, like the initial form of the ECG signal.

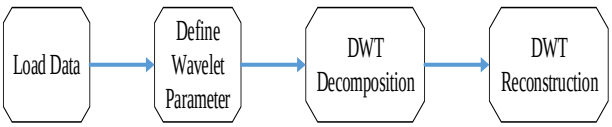

Fig. 1. Denoising algorithm using DWT

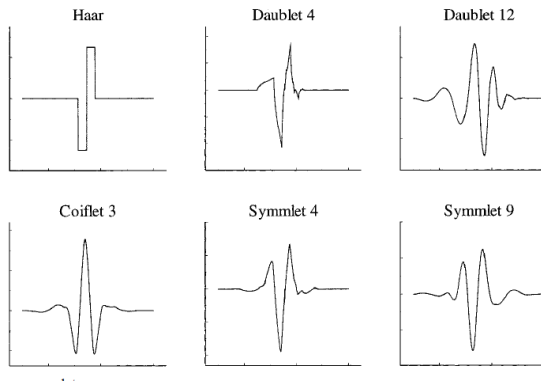

Fig. 2. Types of wavelets that are commonly used [7]

1) Wavelet Parameters

Figure 2 represents the types of wavelets that are commonly used. Daublets come from the Daubechies wavelet family. Doublet is determined by the length of the filter (4-20). Furthermore, Haar is a special form of

p-ISSN 2715-2871
e-ISSN 2714-5247

doublet 2. Coiflet consists of five filters with a filter length that is a multiple of six coefficients. So, coiflet 1 has six coefficients, and coiflet 5 has 30 coefficients. The symmlet form consists of seven shapes ranging from symmlet 4 to symmlet 10 with a filter length of a multiple of two. In this study, we used the "Symmlet 4" type, which has a filter length of 8.

In the section determining the maximum level of decomposition, a calculation involving Equation (1) is used with the logic of thinking for a maximum level where at least one coefficient in the output is not disturbed by edge effects caused by signal extension. In other words, the decomposition stops when the signal becomes shorter than the FIR filter length for the given wavelet type.

$$\max level = \left\lfloor log_2\left(\frac{data\ length}{filter\ length-1}\right)\right\rfloor \quad (1)$$

$$\lambda = \sigma\sqrt{2log_e(N)} \quad (2)$$

Furthermore, a threshold value of 0.5 is proposed in this implementation. Still, the threshold is generally calculated universally in Equation (2), which will produce a soft, hard, garrote, greater, or less thresholding algorithm. In Equation 2, λ is the threshold value, σ is the deviation from noise, and N is the number of samples in the signal that contain noise.

2) Decomposition of approximation and detail coefficients

For example, in Figure 3, the DWT decomposition is calculated using Equation (3).

$$W(l,s) = 2^{\frac{s}{2}}\sum_n x(n)\psi(2^s n - l) \quad (3)$$

$$A(k) = \sum_n x(n)h(2k-n) \quad (4)$$

$$D(k) = \sum_n x(n)g(2k-n) \quad (5)$$

Where l is shifting, s is scale, $x(n)$ is a discrete signal with signal sample parameters, and $\psi(n)$ is the mother wavelet. The decomposition results are in the form of detail coefficients ($D(k)$) from the high pass filter and approximation coefficient ($A(k)$) from the low pass filter. Meanwhile $h(n)$ and $g(n)$ in Equation (4) (5) respectively show the half bands of low pass and high pass.

The next step is the thresholding algorithm process; soft thresholding was chosen in this research, provided that the values are presented in Equation (6).

$$\widetilde{D_j} = \begin{cases} sign(D_j)(D_j - \lambda), & if\,|D_j| > \lambda \\ 0, & if\,|D_j| \le \lambda \end{cases} \quad (6)$$

where $\widetilde{D_j}$ is the updated detail coefficient, D_j is the detail coefficient of the DWT decomposition signal containing noise.

3) DWT Reconstruction

The results of the thresholding algorithm process in updated detailed coefficients are used as input for reconstructing DWT. An example of level 2 DWT reconstruction is shown in Figure 4.

C. Fast Fourier Transform (FFT)

FFT is a sequential computation of discrete Fourier transform (DFT). The algorithm for the denoising process using FFT in the proposed research is represented in Figure 5. The initial step is to open and read the ECG signal data using the CSV library. Next is the forward FFT process [6], calculated in Equation (7).

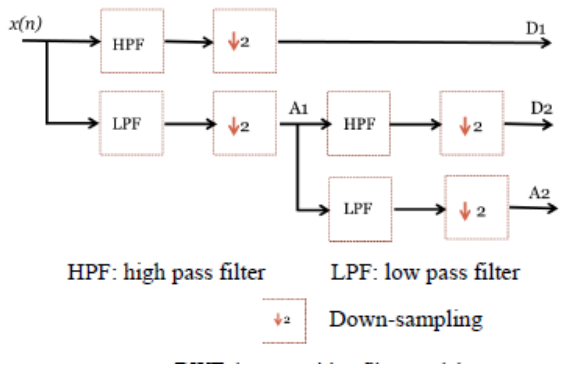

Fig. 3. Decomposition of DWT level 2 [5]

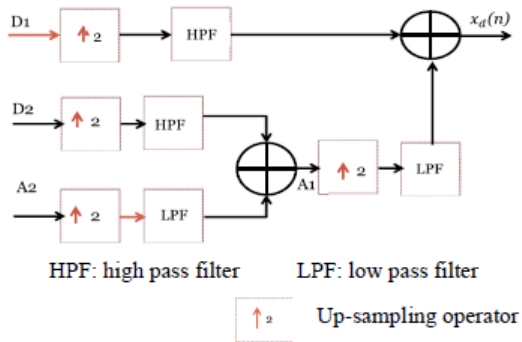

Fig. 4. Inverse DWT level 2 [5]

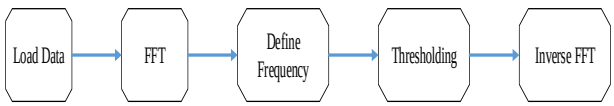

Fig. 5. Denoising algorithm using FFT

$$X[k] = \sum_{n=0}^{L-1} x[n]e^{-j\frac{2\pi}{L}}, \quad 0 \le k \le L-1 \quad (7)$$

Where $x[n]$ is ECG signal, n is sample, and L is total data of ECG signal.

Next, the frequency (k) can be defined with the numpy.fft.rfftfreq library ,which has parameters like window length and sample distance. The resulting frequency value is always a positive number. The frequency results are used for the thresholding process (8) which explains that the forward FFT results at frequencies exceeding $1e^4$or 54.598 will have a value of 0. This has the same role as a low pass type filter, which passes signals with frequencies from 0 to 54.598 Hz. The thresholding results are used in the inverse FFT process (9) so that the signal is based on the time domain, like the initial ECG signal.

$$X[k > 1e^4] = 0 \tag{8}$$

$$x[n] = \frac{1}{L}\sum_{n=0}^{L-1} X[k]e^{-j\frac{2\pi}{L}}, \quad 0 \le n \le L-1 \tag{9}$$

III. Results and Discussion

The denoising process using the DWT wavelet transform method, and the FFT Fourier transform will be discussed in this section. Then, the comparison between the two methods is reviewed from the Signal Noise Ratio (SNR) results of electrocardiogram (ECG) signal denoising.

A. Raw Signal

A file with the extension (.txt) is opened and read line by line so that the contents of the file can be stored in a one-dimensional array for time and a one-dimensional array for ECG signal amplitude. Figure 6 represents the initial ECG signal mixed with noise with a time limit of 0 and 40 seconds from the results of Physionet data recording for 1 minute. The signal amplitude ranged from -1 to 4 μV. Visually, apnea abnormalities indicated by RR-interval variations are not visible, and the noise is intense, so identifying the QRS complex is quite difficult.

B. Denoising using DWT

It is known that the results from Equation (1), with an input amount of data of 6000 and a filter length of the type "Symmlet 4" with a value of 8, obtained a maximum DWT level of 9. Another parameter, namely threshold, by considering Equation (2) and the condition of not knowing the deviation from noise, is assumed that the threshold value becomes 0.5.

The signal decomposition process produces coefficients at each level after knowing the parameters needed in the wavelet transformation process. Figure 7 represents the results of mixed coefficients, namely coefficients consisting of approximation coefficients (top block of Figure 7) and detailed coefficients (eight other blocks in Figure 7) from the first to the 3000th data. Meanwhile, Figure 8 represents the results of soft thresholding on the previous mixed coefficients.

The difference that is visible between Figures 7 and 8 is that after going through thresholding, after the 500th data, the approximation coefficient after going through thresholding has a value of 0, meanwhile, in the detail coefficient of Figure 8 at level 4, the noise is reduced compared to the level 4 detail coefficient in Figure 7 Apart from that, the decomposition results for level 8 detail coefficients show a difference in amplitude from 1 to 0.5.

The final step in the denoising process is a reconstruction of detailed coefficient information for each level, represented in Figure 9. The Inverse DWT results show an ECG signal that has been reduced in noise and amplitude by 0.5, as seen from the comparison of Figures 6 and 9. Meanwhile, using a wavelet filter type "Symmlet 4," the inverse DWT results follow the shape of the filter. The essential information of the apnea ECG signal begins to appear visually in Figure 9.

C. Denoising using FFT

The denoising method using FFT starts from the forward FFT process, which requires input as an ECG Apnea signal. Next, to estimate the noise-free ECG Apnea signal frequency, the principle of the Nyquist Theorem (10) is used so that it can be estimated that the maximum ECG Apnea signal frequency is 50 Hz. For the threshold e^4, which is not far from 50 Hz, producing an FFT reconstruction signal with only a little noise is possible. In reality, Figure 10 produces signal information that is difficult to distinguish from noise, but the noise amplitude is quite well reduced, namely from an amplitude of 3.5 to 0.6. In other words, the spatial information produced by the FFT reconstruction is very weak.

$$Frekuensi_{sampling} \le 2\ Frekuensi_{signal} \tag{10}$$

D. Signal to Noise Ratio (SNR)

Signal to Noise Ratio (SNR) is used to indicate signal quality. The greater the SNR value, the higher the signal. The unit of measure for SNR is decibels (dB), and the following are the SNR results for each denoising method:

```
SNR for a denoised signal using FFT:0.
07123224024929428

SNR for a denoised signal using DWT:0.
07232991004557897
```

These two SNR results show that the FFT method is superior for reducing signal noise. However, visually, the wavelet localization method plays an important role in the signal reconstruction process. This difference can be seen in Figures 9 and 10. Figure 9 shows a reconstruction that resembles the shape of the initial Apnea ECG signal, while Figure 10 looks much different.

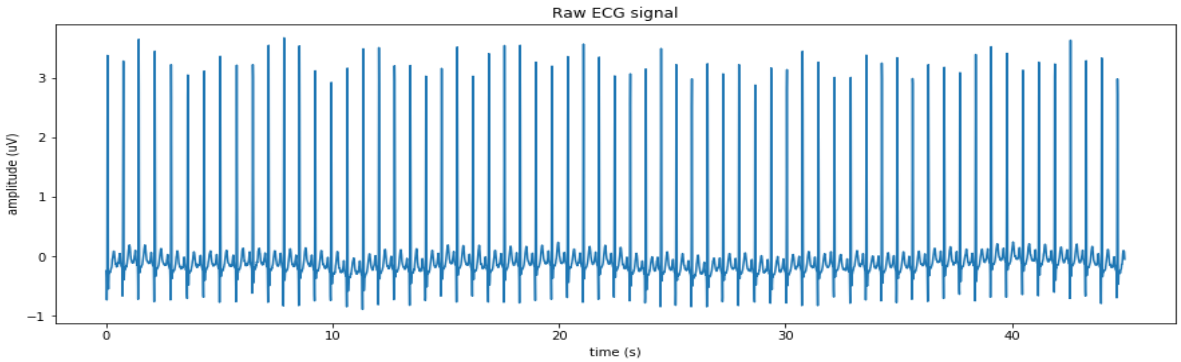

Fig. 6. Apnea ECG Signal

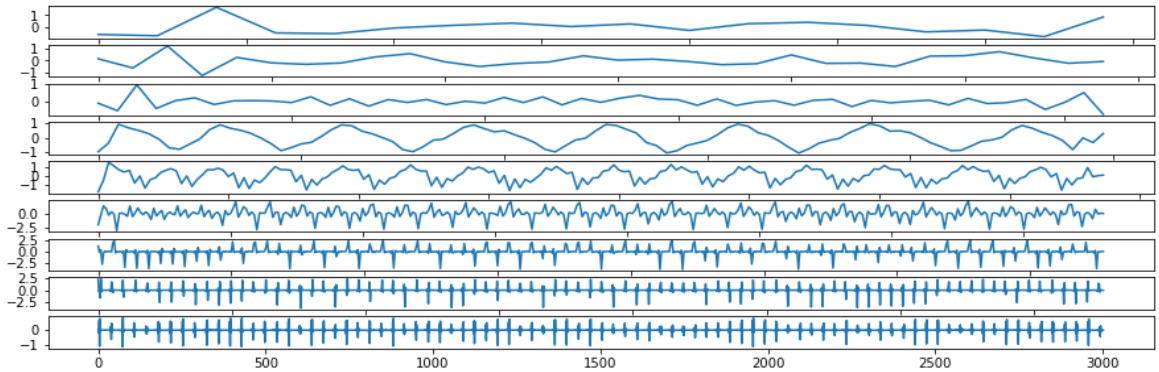

Fig. 7. Mixture coefficient of DWT Level 9

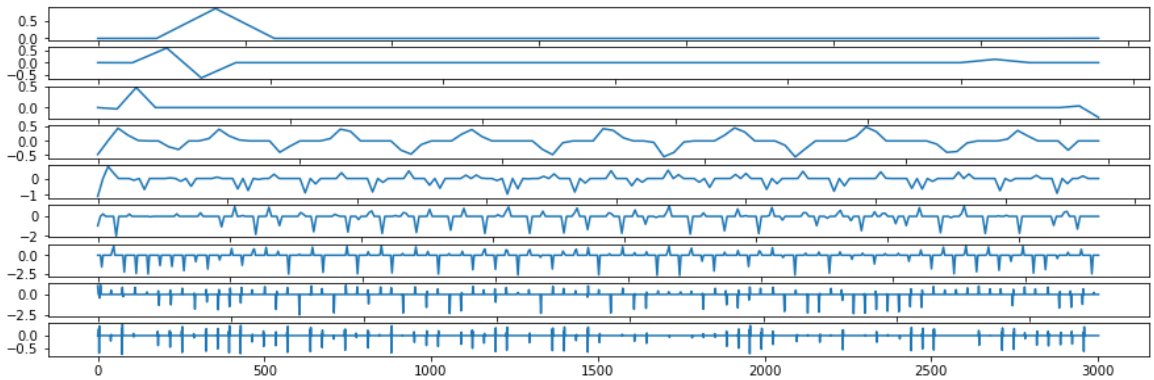

Fig. 8. Detail coefficient of DWT Level 9

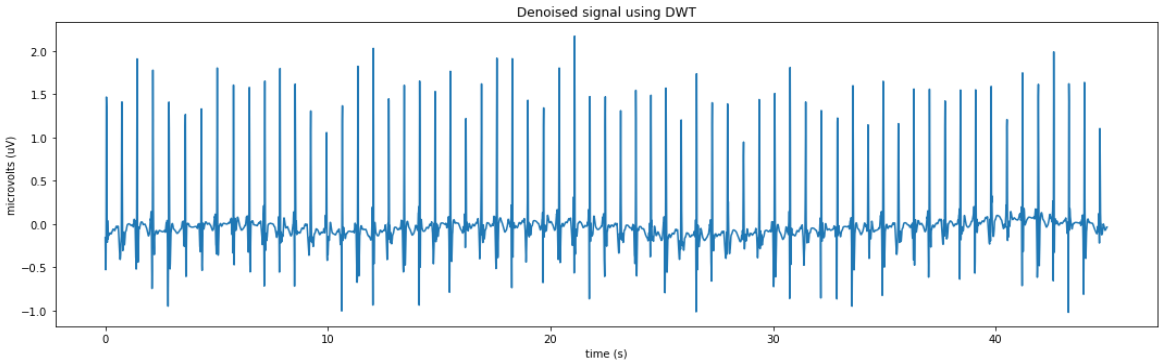

Fig. 9. Denoised signal using DWT

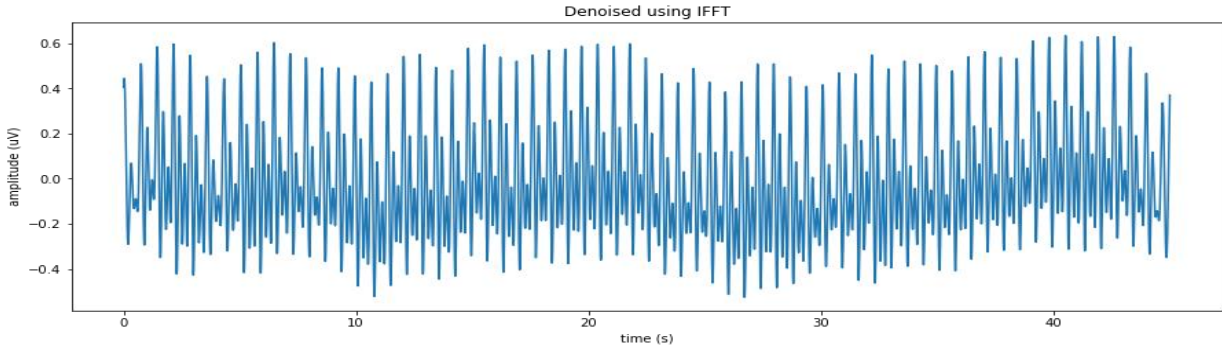

Fig. 10. Denoised signal using FFT

IV. Conclusion

The apnea ECG signal denoising method can be carried out using the wavelet and Fourier transform methods. The best signal-to-noise ratio (SNR) results for the output signal of the denoising process were found in the fast Fourier transform (FFT) method because the estimated threshold value was based on the Nyquist theorem. Visually, the best reconstruction result that still resembles the initial ECG signal uses the discrete wavelet transform (DWT) method because DWT has a locality parameter, which is useful when the signal frequency is not constant.

References

[1] S. K. Yadav, R. Sinha, and P. K. Bora, "Electrocardiogram signal denoising using non-local wavelet transform domain filtering," *IET Signal Process.*, vol. 9, no. 1, pp. 88–96, 2015, doi: 10.1049/iet-spr.2014.0005.

[2] I. Fuadina, J. Hendry, and D. Zulherman, "Performance Analysis of Fetal-Phonocardiogram Signal Denoising Using The Discrete Wavelet Transform," *J. Infotel*, vol. 11, no. 4, pp. 0–10, 2019, doi: 10.20895/infotel.v11i4.458.

[3] A. Velayudhan and S. Peter, "Noise Analysis and Different Denoising Techniques of ECG Signal - A Survey," *IOSR J. Electron. Commun. Eng.*, vol. 3, no. Iii, pp. 40–44, 2016.

[4] V. Sivaranjni and T. Rammohan, "Detection of sleep apnea through ECG signal features," *Proceeding IEEE - 2nd Int. Conf. Adv. Electr. Electron. Information, Commun. Bio-Informatics, IEEE - AEEICB 2016*, pp. 322–326, 2016, doi: 10.1109/AEEICB.2016.7538301.

[5] M. Aqil, A. Jbari, and A. Bourouhou, "ECG signal denoising by discrete wavelet transform," *Int. J. Online Eng.*, vol. 13, no. 9, pp. 51–68, 2017, doi: 10.3991/ijoe.v13i09.7159.

[6] A. Kumar, R. Ranganatham, R. Komaragiri, and M. Kumar, "Efficient QRS complex detection algorithm based on Fast Fourier Transform," *Biomed. Eng. Lett.*, vol. 9, no. 1, pp. 145–151, 2019, doi: 10.1007/s13534-018-0087-y.

[7] C. Cai and P. D. B. Harrington, "Different discrete wavelet transforms applied to denoising analytical data," *J. Chem. Inf. Comput. Sci.*, vol. 38, no. 6, pp. 1161–1170, 1998, doi: 10.1021/ci980210j.

[8] PhysioNet, "PhysioBank ATM", https://archive.physionet.org/cgi-bin/atm/ATM [diakses tanggal 12 Mei 2020]